EN

LADDOTANK®

sustainable energy solutions

Termoventiler

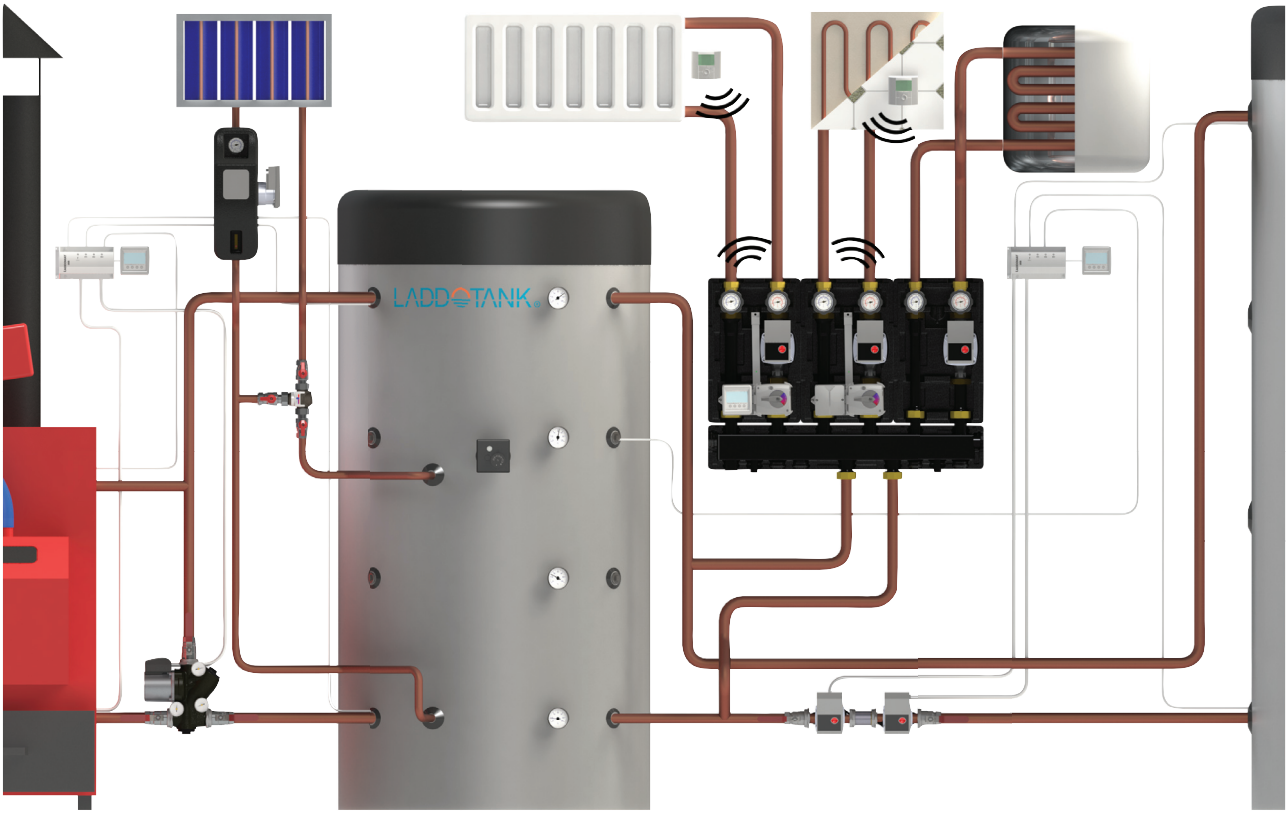
LADDOTANK

Index

Why accumulator tank?

The function of an accumulator tank is simple and is based on the principle that hot water is lighter than cold. Hot water from the boiler is pumped into the top of the tank, while cold water is retrieved from the bottom of the tank.

For this process to work as intended, the border between hot and cold water has to be sharp. If hot and cold water are mixed all the time, the overall temperature will be lower. This means that the capacity will be lower – in worst case the energy won't be enough even for one single shower.

The secret behind perfect separation is to control the intake of the tank so the separation is not disturbed. The fitting that accomplishes this is called a charging unit, and the market leading charging unit is Laddomat®.

Example of tank without separation

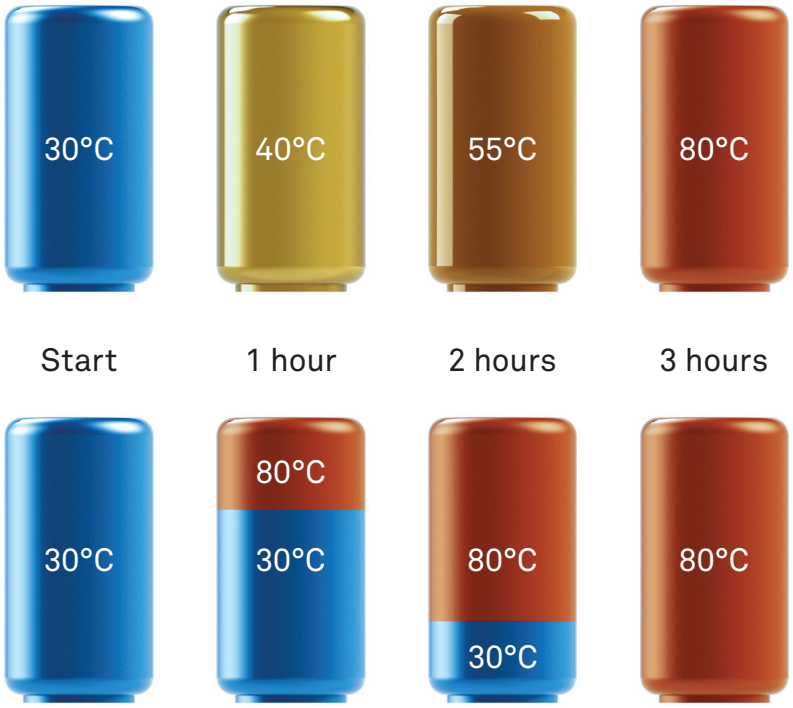

Example of tank with separation

Why LADDOTANK®?

- Accumulation technique has always been our strength!

- Laddotank is a tank produced for today's and future energy sources.
- The DHW coil is made in stainles steel (316L), which makes it less vulnerable to for example lime rich water, where copper coils are much more vulnerable.
  The coil shakes slightly when the water is circulating, which lowers the risk of coating even further.

- Tanks up to 500 l comes with hard PUR insulation (not removable), while larger tanks comes with preassembled soft polyester fleece insulation. Thanks to low weight and zipper, the insulation is easy to take off and on. The insulation meets applicable EU directives and classifications for today's accumulotor tanks. The insulation has fire classification B1 according to DIN 4102.

- Thanks to one DHW coil stretching all the way from the bottom to the top, no extra external connections has to be made to connect the pre-heating coil with the top coil.

- All coils are built to ensure you get hot water for your system in best and fastest possible way. This thanks to corrugated coils made with thoroughly tested dimensions and lengths.

- Termoventiler has been market leader in thermal heating systems since 1996.

- Our technical know-how in system solutions makes it possible to help YOU choose the best accumulator tank for YOUR application.

LADDOTANK® EFFICIENT STORAGE OF THERMAL ENERGY IN WATERBORNE HEATING SYSTEMS

LADDOTANK® PUFFER

Buffer tank

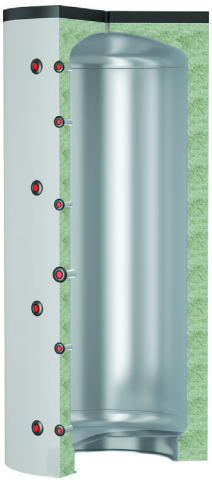

TECHNICAL DESCRIPTION

Laddotank has been designed for thermal energy storage in waterborne heating system, and to optimize the operating conditions of the heat source (ie. heat pump, oil, wood, pellet, sun etc).

The tank increases the user's heating comfort significantly thanks to a steady supply of thermal energy even when the boiler is not running.

MATERIAL

Steel construction with exterior paint.

INSULATION

Model 500: Hard PUR (not removable).

Other models: Soft polyester fleece, made of 100% recyclable material, with high thermal insulation and low thermal conductivity: 0,035 W / mK.

Fire resistance class Bs2d0 according to EN 13501 (B1 according to DIN 4102).

Covered in gray PVC jacket and lid.

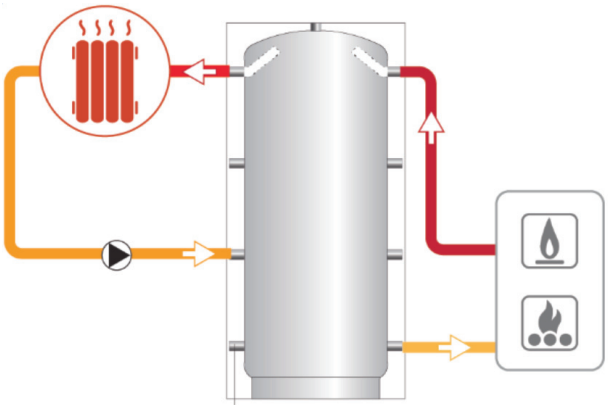

Example of system

TECHNICAL DATA

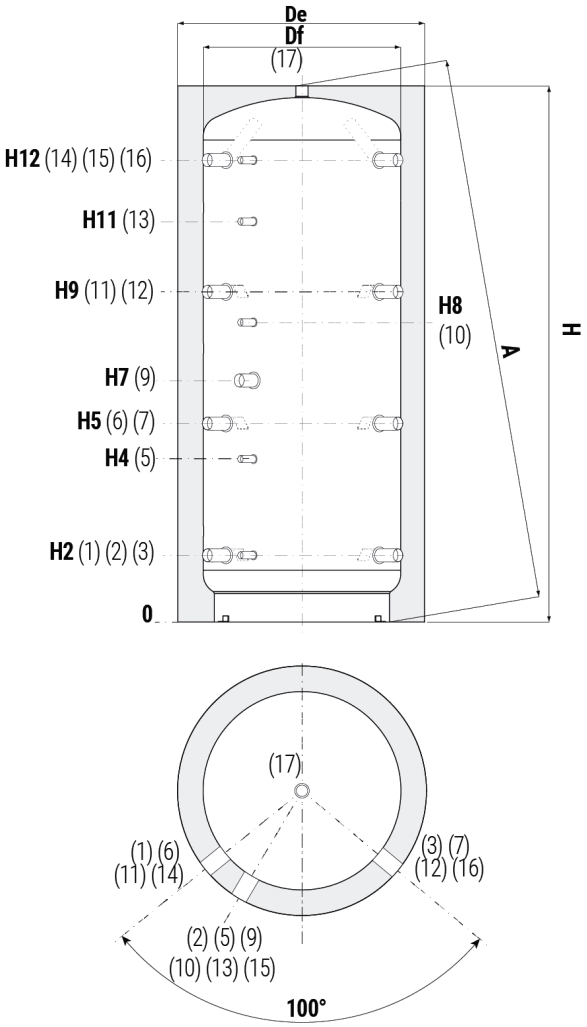

Max. work. pressure Tank	Max. work. temp. Tank
[bar]	[°C}
3	99

	CONNECTIONS
1-3 6-7	To Heat source 1" 1/2 IT
2-5	Sub. tube for sensors/thermometers 1/2" IT
9	Connection for Immersion heater 1" 1/2 IT
10	Sub. tube for sensors/thermometers 1/2" IT
11-12 14-16	Inlet Heat / From Heat Source 1" 1/2 IT
13	Sub. tube for sensors/thermometers 1/2" IT
15	Sub. tube for sensors/thermometers 1/2" IT
17	Inlet Heat 1" 1/2 IT

Model	Volume	Df	De	H	A	H2	H4	H5	H7	H8	H9	H11	H12
	[L]	[mm]	[mm]	[mm]	[mm]	[mm]	[mm]	[mm]	[mm]	[mm]	[mm]	[mm]	[mm]
500*	478	//	750	1620	1784	247	533	629	841	930	1011	1231	1343
800	805	790	1010	1840	2071	265	584	690	823	988	1115	1332	1541
1000	946	790	1010	2130	2332	265	656	787	998	1188	1309	1588	1831
1500	1454	950	1210	2250	2504	313	736	845	1061	1286	1377	1653	1909
2000	1973	1100	1360	2320	2659	347	770	879	1060	1300	1411	1687	1943

**Available with soft fleece on special order, Df = 650 mm*

Gray = In stock. For other models, please contact us.

LADDOTANK® PUFFER COMPACT

Buffer tank

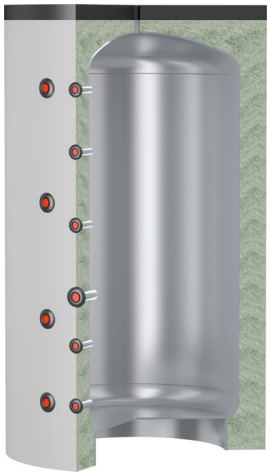

TECHNICAL DESCRIPTION

Laddotank has been designed for thermal energy storage in waterborne heating system, and to optimize the operating conditions of the heat source (ie. heat pump, oil, wood, pellet, sun etc).

The tank increases the user's heating comfort significantly thanks to a steady supply of thermal energy even when the boiler is not running.

MATERIAL

Steel construction with exterior paint.

INSULATION

100 mm soft polyester fleece, made of 100% recyclable material, with high thermal insulation and low thermal conductivity: 0,035 W / mK.

Fire resistance class Bs2d0 according to EN 13501 (B1 according to DIN 4102).

Covered in gray PVC jacket and lid.

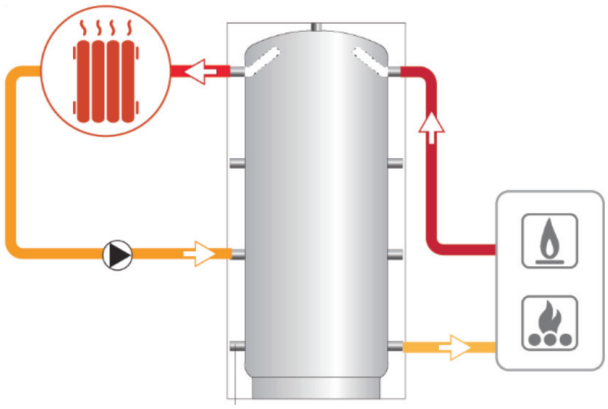

Example of system

TECHNICAL DATA

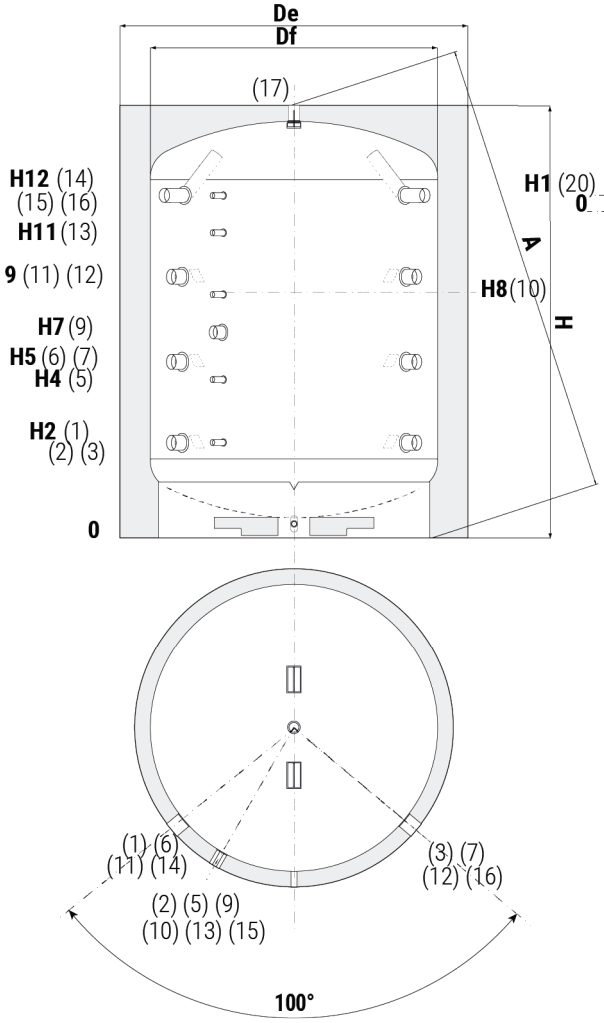

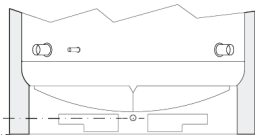

Max. work. pressure Tank	Max. work. temp. Tank
[bar]	[°C}
3	99

	CONNECTIONS
1-3 6-7	To Heat source / Return pipe
2-5	Sub. tube for sensors/thermometers 1/2" IT
9	Connection for Immersion heater
10	Sub. tube for sensors/thermometers 1/2" IT
11-12 14-16	Inlet Heat / From Heat Source
13-15	Sub. tube for sensors/thermometers 1/2" IT
17	Inlet Heat
20	Draining (only for 3000, 4000 and 5000)

The COMPACT model has smart solutions

Made for low ceiling height, easy to transport, easy to move

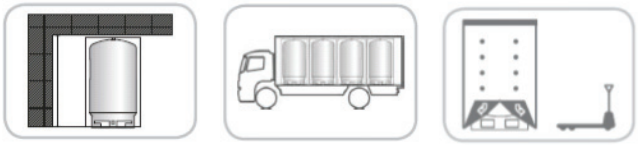

Model	Volume	Df	De	H	A	H1	H2	H4	H5	H7	H8	H9	H11	H12	1-3-6-7-11-12-14-16	9-17	20
	[lt]	[mm]	[mm]	[mm]	[mm]	[mm]	[mm]	[mm]	[mm]	[mm]	[mm]	[mm]	[mm]	[mm]	Conn.		
2500	2306	1250	1450	2351	2455	140	556	886	996	1051	1216	1436	1546	1876	1"	1/2	1"
3000	3017	1500	1700	2180	2374	109,5	567	841	932	1252	1115	1297	1389	1662	2"	2"	1"
4000	3986	1600	1800	2456	2643	94,5	574	910	1022	1414	1246	1470	1582	1918	2"	2"	1"
4500	4411	1800	2000	2230	2575	90	582	856	947	1267	1130	1312	1404	1677	2"	2"	1"
5000	5042	1800	2000	2480	2764	90	583	919	1031	1423	1255	1479	1591	1927	2"	2"	1"
6000	5672	1800	2000	2730	2960	90	605	1005	1114	1295	1535	1646	1922	2155	3"	2"	1"
8000	7564	1800	2000	3480	3640	90	606	1066	1372	1526	1986	2138	2446	2904	3"	2"	1"

Model not in stock

LADDOTANK® PUFFER COMPACT F

Buffer tank, with flanged connections

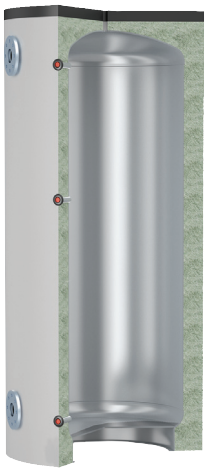

TECHNICAL DESCRIPTION

Laddotank has been designed for thermal energy storage in waterborne heating system, and to optimize the operating conditions of the heat source (ie. heat pump, oil, wood, pellet, sun etc).

The tank increases the user's heating comfort significantly thanks to a steady supply of thermal energy even when the boiler is not running.

MATERIAL

Steel construction with exterior paint.

INSULATION

100 mm soft polyester fleece, made of 100% recyclable material, with high thermal insulation and low thermal conductivity: 0,035 W / mK.

Fire resistance class Bs2d0 according to EN 13501 (B1 according to DIN 4102).

Covered in gray PVC jacket and lid.

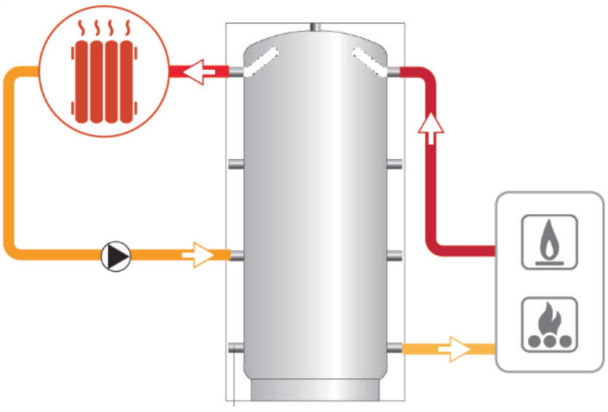

Example of system

TECHNICAL DATA

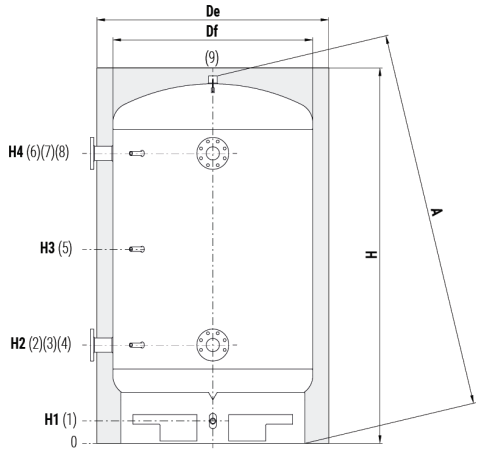

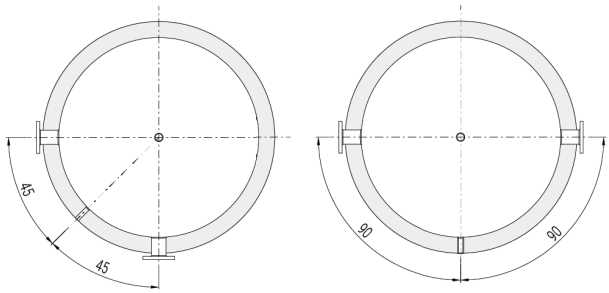

This model is available both with 90° and 180° angle

Max. work. pressure Tank	Max. work. temp. Tank
[bar]	[°C}
3	99

	CONNECTIONS
1	Draining 1" IT (2" IT for 10 and 12000
2, 4	To Heat source / Return pipe
6, 8	Inlet Heat / From Heat Source
3, 5, 7	Sub. tube for sensors/thermometers 1/2" IT
9	Inlet Heat

The COMPACT model has smart solutions

Made for low ceiling height, easy to transport, easy to move

Model	Volume	Df	De	H	A	H1	H2	H3	H4	H5	2, 4, 6, 8	9
	[L]	[mm]	[mm]	[mm]	[mm]	[mm]	[mm]	[mm]	[mm]	[mm]	Conn.	Conn.
2500	2306	1250	1450	2351	2433	140	616	1216	1816	//	PN16 DN80	1" 1/2 IIT
3000	3017	1500	1700	2180	2305	109	640	1115	1590	//	PN16 DN80	2" IT
4000	3986	1600	1800	2456	2583	95	646	1246	1846	//	PN16 DN80	2" IT
4500	4411	1800	2000	2230	2405	89	655	1130	1605	//	PN16 DN80	2" IT
5000	5042	1800	2000	2480	2638	89	675	1255	1835	//	PN16 DN100	2" IT
6000	5672	1800	2000	2730	2875	89	675	1380	2085	//	PN16 DN100	2" IT
8000	7564	1800	2000	3480	3594	89	675	1705	2835	//	PN16 DN100	2" IT
10000	10455	2000	2200	3916	4007	191	826	1636	3256	2446	PN16 DN100	2" IT
12000	12010	2000	2200	4461	4502	191	826	1803	3756	2779	PN16 DN100	2" IT

Model not in stock

LADDOTANK® PUFFER 1

Accumulator tank with one heating coil

TECHNICAL DESCRIPTION

Laddotank has been designed for thermal energy storage in waterborne heating system, and to optimize the operating conditions of the heat source (ie. heat pump, oil, wood, pellet, sun etc).

The tank increases the user's heating comfort significantly thanks to a steady supply of thermal energy even when the boiler is not running.

MATERIAL

Steel construction with exterior paint.

INSULATION

Model 500: Hard PUR (not removable).

Other models: Soft polyester fleece, made of 100% recyclable material, with high thermal insulation and low thermal conductivity: 0,035 W / mK.

Fire resistance class Bs2d0 according to EN 13501 (B1 according to DIN 4102).

Covered in gray PVC jacket and lid.

HEATING COIL

1 pcs heating coil, formable steel.

CAPACITY (COIL)

See page 20.

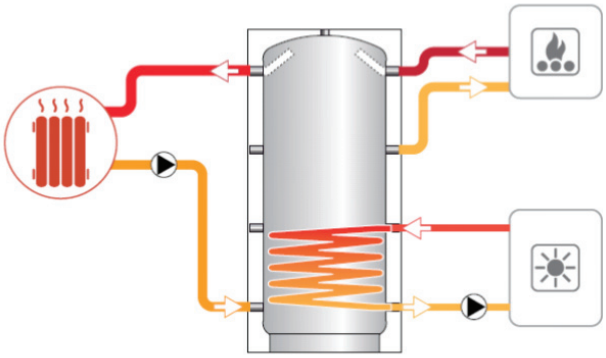

Example of system

TECHNICAL DATA

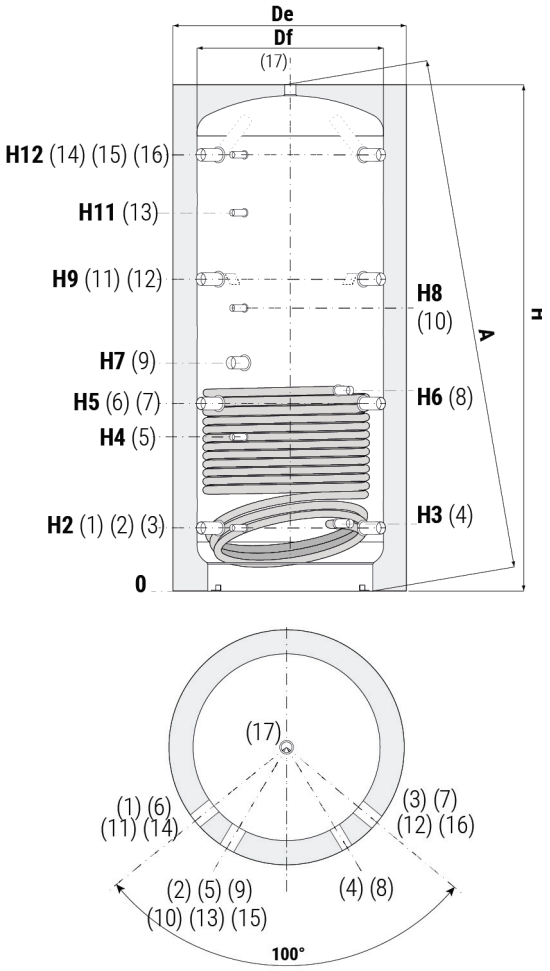

Max. work pressure Tank	Max. work temp. Tank	Max. work pressure Coil	Max. work temp. Coil
[bar]	[°C}	[bar]	[°C}
3	99	12	110

	CONNECTIONS
1-3-6-7	To Heat source 1" 1/2 IT
2-5	Sub. tube for sensors/thermometers 1/2" IT
4	Outlet coil 1" IT
8	Inlet coil 1" IT
9	Connection for Immersion heater 1" 1/2 IT
10	Sub. tube for sensors/thermometers 1/2" IT
11-12-14-16	Inlet Heat / From Heat Source 1" 1/2 IT
13-15	Sub. tube for sensors/thermometers 1/2" IT
17	Inlet Heat 1" 1/2 IT

Model	Volume	Volume Coil	Surface Coil	Df	De	H	A	H2	H3	H4	H5	H6	H7	H8	H9	H11	H12
	[L]	[L]	[m²]	[mm]	[mm]	[mm]	[mm]	[mm]	[mm]	[mm]	[mm]	[mm]	[mm]	[mm]	[mm]	[mm]	[mm]
500*	478	11,5	1,9	//	750	1620	1784	247	260	533	629	745	841	930	1011	1231	1343
800	805	16,3	2,5	790	1010	1840	2071	265	278	584	690	762	823	988	1115	1332	1541
1000	946	20,7	3,1	790	1010	2130	2332	265	284	656	787	953	998	1188	1309	1588	1831
1500	1454	25,3	3,8	950	1210	2250	2504	313	336	736	845	1006	1061	1286	1377	1653	1909
2000	1973	29,6	4,6	1100	1360	2320	2659	347	370	770	879	1001	1060	1300	1411	1687	1943

**Available with soft fleece on special order, Df = 650 mm*

Gray = In stock. For other models, please contact us.

LADDOTANK® PUFFER 2

Accumulator tank with two heating coils

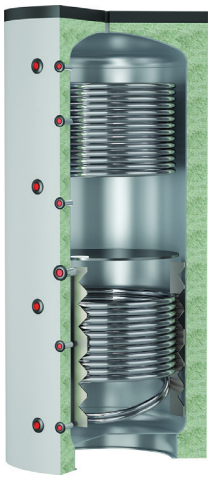

TECHNICAL DESCRIPTION

Laddotank has been designed for thermal energy storage in waterborne heating system, and to optimize the operating conditions of the heat source (ie. heat pump, oil, wood, pellet, sun etc).

The tank increases the user's heating comfort significantly thanks to a steady supply of thermal energy even when the boiler is not running.

MATERIAL

Steel construction with exterior paint.

INSULATION

Model 500: Hard PUR (not removable).

Other models: Soft polyester fleece, made of 100% recyclable material, with high thermal insulation and low thermal conductivity: 0,035 W / mK.

Fire resistance class Bs2d0 according to EN 13501 (B1 according to DIN 4102).

Covered in gray PVC jacket and lid.

HEATING COILS

2 pcs heating coils, formable steel.

CAPACITY (COILS)

See page 20.

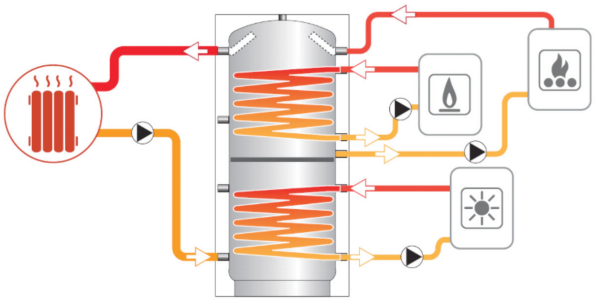

Example of system

TECHNICAL DATA

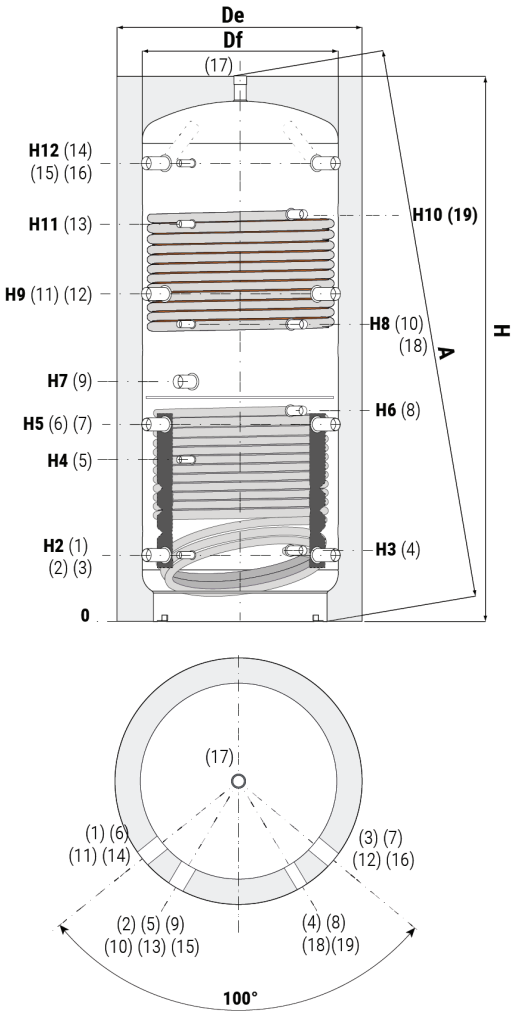

Max. work pressure Tank	Max. work temp. Tank	Max. work pressure Coils	Max. work temp. Coils
[bar]	[°C}	[bar]	[°C}
3	99	12	110

	CONNECTIONS
1-3-6-7	To Heat source 1" 1/2 IT
2-5	Sub. tube for sensors/thermometers 1/2" IT
4	Outlet lower Coil 1" IT
8	Inlet lower Coil 1" IT
9	Connection for Immersion heater 1" 1/2 IT
10	Sub. tube for sensors/thermometers 1/2" IT
11-12-14-16	Inlet Heat / From Heat Source 1" 1/2 IT
13-15	Sub. tube for sensors/thermometers 1/2" IT
17	Inlet Heat 1" 1/2 IT
18	Outlet upper Coil 1" IT
19	Inlet upper Coil 1" IT

Model	Volume	Volume U.coil	Surface U.coil	Volume L.coil	Surface L.coil	Df	De	H	A	H2	H3	H4	H5	H6	H7	H8	H9	H11	H12
	[L]	[L]	[m²]	[L]	[m²]	[mm]	[mm]	[mm]	[mm]	[mm]	[mm]	[mm]	[mm]	[mm]	[mm]	[mm]	[mm]	[mm]	[mm]
500*	478	8,5	1,3	12	1,9	//	//	1620	1784	247	260	533	629	745	841	930	1011	1231	1343
800	805	11,9	1,5	16,4	2,3	790	1010	1840	2071	265	278	584	690	762	823	988	1115	1332	1541
1000	946	16,2	2,5	20,5	3,1	790	1010	2130	2332	265	284	656	787	953	998	1188	1309	1588	1831
1500	1435	18,1	2,8	25,2	3,8	950	1210	2250	2504	313	336	736	845	1006	1061	1286	1377	1653	1909
2000	1973	18,1	2,8	29,9	4,6	1100	1360	2320	2659	347	370	770	879	1001	1060	1300	1411	1687	1943

**Available with soft fleece on special order, Df = 650 mm*

Gray = In stock. For other models, please contact us.

LADDOTANK® ECO COMBI 1

Accumulator tank with one stainless steel coil, for domestic hot water (DHW).

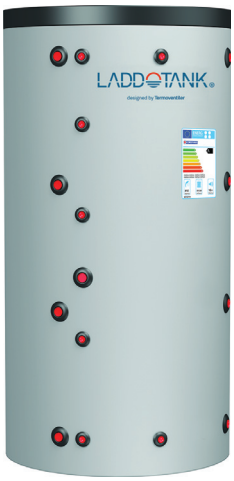

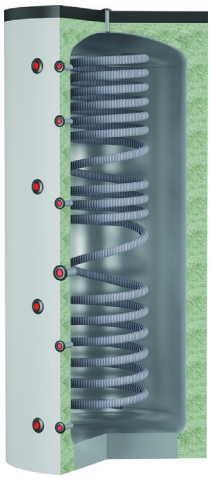

TECHNICAL DESCRIPTION

Laddotank has been designed for thermal energy storage in waterborne heating system, and to optimize the operating conditions of the heat source (ie. heat pump, oil, wood, pellet, sun etc).

The tank can produce hot water for sanitary use thanks to the built-in coil made of stainless steel.

The tank makes is possible to maintain a good hot water production, even if the temperature in the primary system isn't very high (for example heat pump as primary source and solar heat as support).

The tank increases the user's heating comfort significantly thanks to a steady supply of thermal energy even when the boiler is not running.

MATERIAL

Steel construction with exterior paint.

DHW COIL

Stainless (316L) steel corrugated pipes, suitable for drinkable water according to D.M. n. 174 dated 06.04.04.

CAPACITY (COIL)

See page 21.

INSULATION

Model 500: Hard PUR (not removable).

Other models: Soft polyester fleece, made of 100% recyclable material, with high thermal insulation and low thermal conductivity: 0,035 W / mK.

Fire resistance class Bs2d0 according to EN 13501 (B1 according to DIN 4102).

Covered in gray PVC jacket and lid.

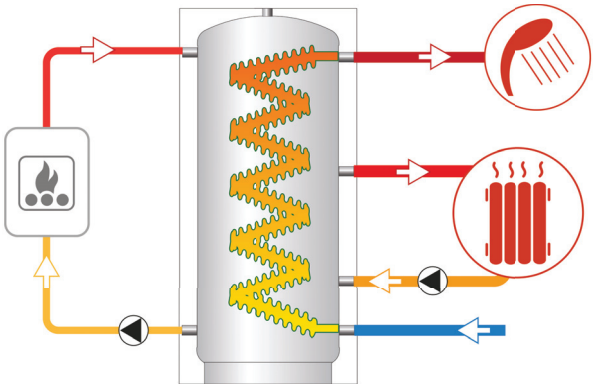

Example of system

TECHNICAL DATA

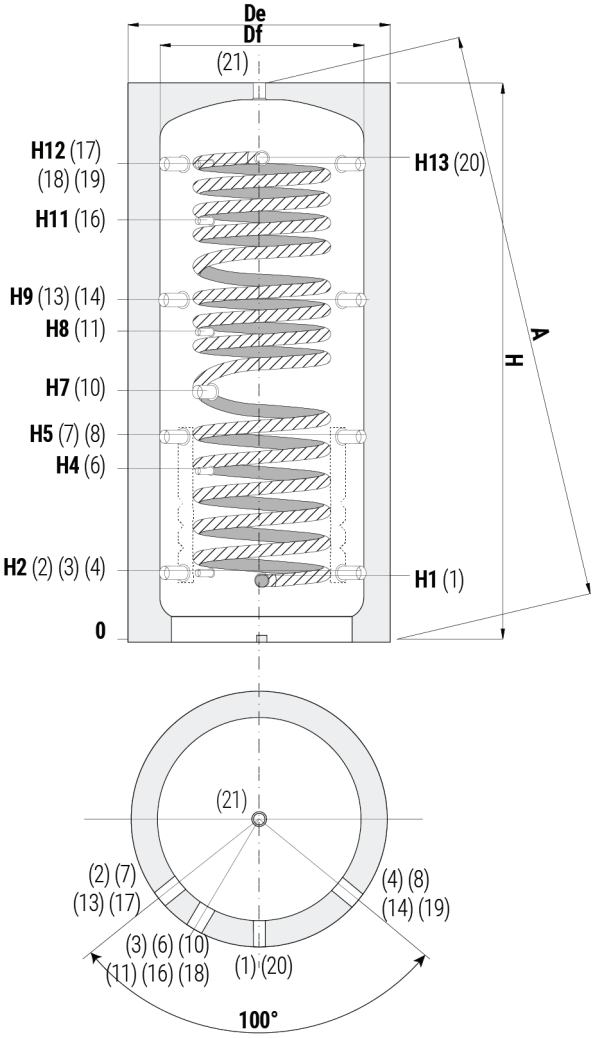

Max. work pressure Tank	Max. work temp. Tank	Max. work pressure DHW Coil
[bar]	[°C}	[bar]
3	99	6

	CONNECTIONS
1	Inlet (cold) DHW coil 1" ET
2-4	To Heat source / Return pipe 1" 1/2 IT
3	Sub. tube for sensors/thermometers 1/2" IT
6	Sub. tube for sensors/thermometers 1/2" IT
7-8	To Heat source / Return pipe 1" 1/2 IT
10	Connection for Immersion heater 1" 1/2 IT
11	Sub. tube for sensors/thermometers 1/2" IT
13-14	To Heat source / Return pipe / Supplementary heat source 1" 1/2 IT
16	Sub. tube for sensors/thermometers 1/2" IT
17-19-21	Inlet Heat From Heat source 1" 1/2 IT
18	Sub. tube for sensors/thermometers 1/2" IT
20	Outlet (hot) DHW coil 1" ET

Model	Volume	Volume coil	Surface coil	Df	De	H	A	H1	H2	H4	H5	H7	H9	H11	H12	H13
	[L]	[L]	[m²]	[mm]	[mm]	[mm]	[mm]	[mm]	[mm]	[mm]	[mm]	[mm]	[mm]	[mm]	[mm]	[mm]
500*	478	26,6	4,5	//	750	1619	1745	230	247	533	629	841	1011	1231	1343	1360
800	803	33,4	5,8	790	1010	1838	2001	248	265	584	690	823	1115	1332	1541	1558
1000	944	45,5	7,8	790	1010	2128	2270	248	265	656	787	998	1309	1588	1831	1843
1250	1248	45,5	7,8	900	1160	2201	2378	296	313	705	835	986	1357	1586	1879	1896
1500	1432	55,3	9,5	950	1210	2250	2442	296	313	736	845	1061	1377	1653	1909	1921
2000	1970	72,2	12,3	1100	1360	2319	2567	330	347	770	879	1060	1411	1687	1943	1955

**Available with soft fleece on special order, Df = 650 mm*

Gray = In stock

LADDOTANK® ECO COMBI 2

Accumulator tank with one stainless steel coil for domestic hot water and one heating coil for connecting extra heat source, for example solar collectors.

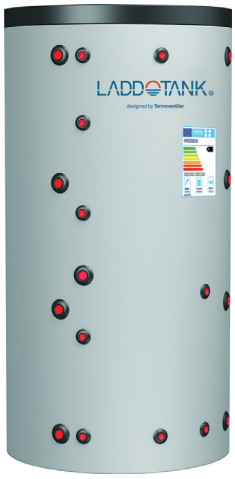

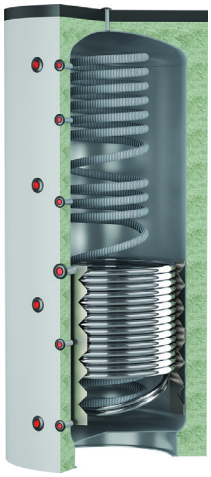

TECHNICAL DESCRIPTION

Laddotank has been designed for thermal energy storage in waterborne heating system, and to optimize the operating conditions of the heat source (ie. heat pump, oil, wood, pellet, sun etc).

The tank can produce hot water for sanitary use thanks to the built-in coil made of stainless steel.

The tank makes is possible to maintain a good hot water production, even if the temperature in the primary system isn't very high, for example heat pump as primary source and solar heat as support.

Thanks to the design with heating coil, the tank also makes it possible to use two different heat sources, for example biofuel and solar heat.

The tank increases the user's heating comfort significantly thanks to a steady supply of thermal energy even when the boiler is not running.

MATERIAL

Steel construction with exterior paint.

DHW COIL

Stainless (316L) steel corrugated pipes, suitable for drinkable water according to D.M. n. 174 dated 06.04.04.

HEATING COIL

1 pcs heating coil, formable steel.

CAPACITY (COILS)

See page 21.

INSULATION

Model 500: Hard PUR (not removable).

Other models: Soft polyester fleece, made of 100% recyclable material, with high thermal insulation and low thermal conductivity: 0,035 W / mK.

Fire resistance class Bs2d0 according to EN 13501 (B1 according to DIN 4102).

Covered in gray PVC jacket and lid.

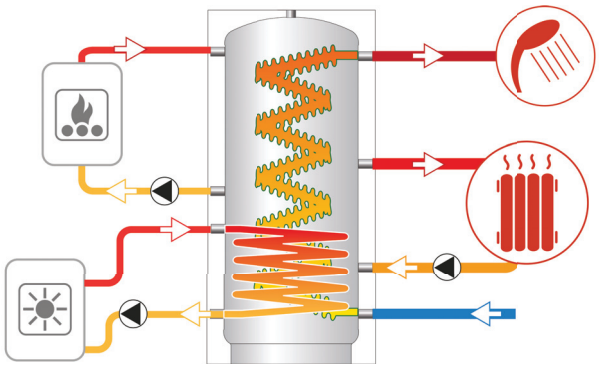

Example of system

TECHNICAL DATA

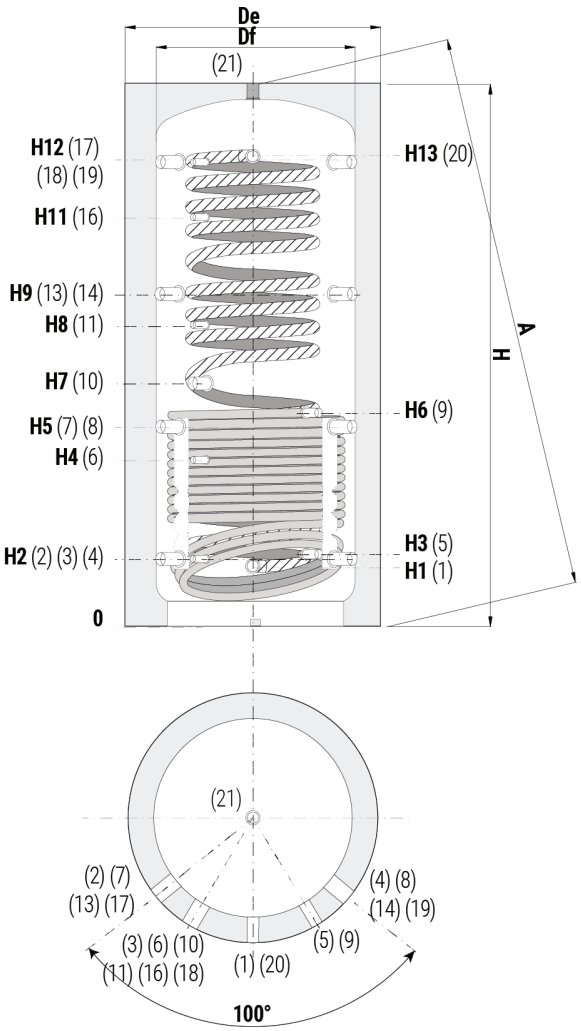

Max. work pressure Tank	Max. work temp. Tank	Max. work pressure DHW Coil	Max. work pressure Heat coil
[bar]	[°C}	[bar]	[bar]
3	99	6	12

	CONNECTIONS
1	Inlet (cold) DHW coil 1" ET
2-4	To Heat source / Return pipe 1" 1/2 IT
3	Sub. tube for sensors/thermometers 1/2" IT
5	Outlet lower Heat coil 1" IT
6	Sub. tube for sensors/thermometers 1/2" IT
7, 8	To Heat source / Return pipe 1" 1/2 IT
9	Inlet lower Heat coil 1" IT
10	Connection for Immersion heater 1" 1/2 IT
11	Sub. tube for sensors/thermometers 1/2" IT
13-14	To Heat source / Return pipe / Supplementary heat source 1" 1/2 IT
16	Sub. tube for sensors/thermometers 1/2" IT
17-19-21	Inlet Heat / From Heat Source 1" 1/2 IT
18	Sub. tube for sensors/thermometers 1/2" IT
20	Outlet (hot) DHW coil 1" ET

Model	Volume	Volume DHW coil	Surface DHW coil	Volume Heat coil	Surface Heat coil	Df	De	H	A	H1	H2	H4	H5	H7	H9	H11	H12	H13
M	[L]	[L]	[m²]	[L]	[m²]	[mm]	[mm]	[mm]	[mm]	[mm]	[mm]	[mm]	[mm]	[mm]	[mm]	[mm]	[mm]	[mm]
500*	478	26,6	4,5	11,5	1,9	//	750	1619	1745	230	247	533	629	841	1011	1231	1343	1360
800	803	33,4	5,8	16,3	2,5	790	1010	1838	2001	248	265	584	690	823	1115	1332	1541	1558
1000	944	45,5	7,8	20,7	3,1	790	1010	2128	2270	248	265	656	787	998	1309	1588	1831	1843
1250	1248	45,5	7,8	22,3	3,4	900	1160	2201	2378	296	313	705	835	986	1357	1586	1879	1896
1500	1432	55,3	9,5	25,3	3,8	950	1210	2250	2442	296	313	736	845	1061	1377	1653	1909	1921
2000	1970	72,2	12,3	29,6	4,6	1100	1360	2319	2567	330	347	770	879	1060	1411	1687	1943	1955

**Available with soft fleece on special order, Df = 650 mm*

Gray = In stock. For other models, please contact us.

Puffer 1 & 2 – (Lower) Fixed heat exchanger powers chart

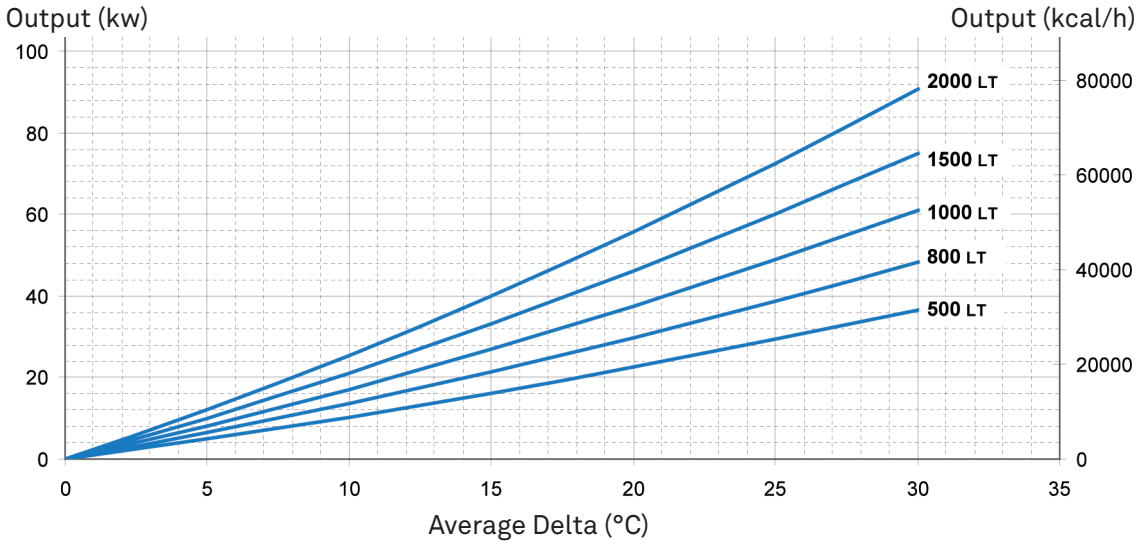

Thermal output is given in both kW or kcal/h in terms of average temperature difference between primary and secondary circuit, all for a range of primary 3 m³/h. For example, a PUFFER 1 of 1000 liters Capacity with a water flow of 3 m³/h at 80 °C inlet and outlet at 70 °C, has on the storage of water an average temperature of 60 °C, the mean difference of temperature will be:
(80 + 70) / 2-60 = 15 °C and therefore you can exchange up to approximately 28 kW.

Output of the lower heat exchangers PUFFER depending on the average DeltaT between primary and accumulation considering flow rate 3 m³/h.

Puffer 2 – (Upper) Fixed heat exchanger powers chart

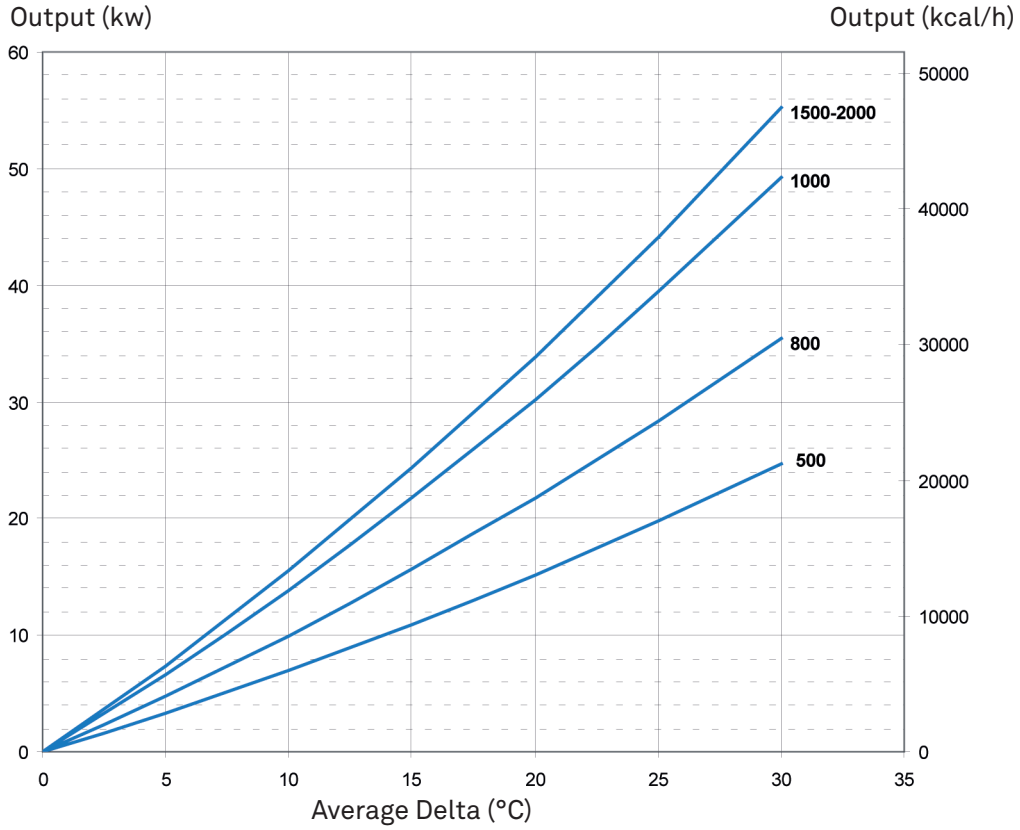

Eco Combi – Output and performances

D.H.W storage performances

			Complete heated storage volume	Complete heated storage volume	Upper part heated storage volume	Upper part heated storage volume
Model	DHW Volume	DHW exchanger Surface	Max sanitary water produced from 10°C to 45°C with storage at 65°C and boiler on	Max sanitary water produced from 10°C to 45°C with storage at 65°C and boiler off	Max sanitary water produced from 10°C to 45°C with storage at 65°C and boiler on	Max sanitary water produced from 10°C to 45°C with storage at 65°C and boiler off
	(Litres)	(m²)	(lt/min)	(Litres)	(lt/min)	(Litres)
500	26,6	4,5	29	10 lt/min: 354 lt 25 lt/min: 227 lt	15	10 lt/min: 102 lt 25 lt/min: 75 lt
800	33,4	5,8	37	10 lt/min: 587 lt 25 lt/min: 377 lt	23	10 lt/min: 218 lt 25 lt/min: 160 lt
1000	45,5	7,8	50	10 lt/min: 800 lt 25 lt/min: 541 lt	27	10 lt/min: 294 lt 25 lt/min: 216 lt
1250	45,5	7,8	50	10 lt/min: 922 lt 25 lt/min: 592 lt	27	10 lt/min: 310 lt 25 lt/min: 230 lt
1500	55,3	9,5	57	10 lt/min: 1144 lt 25 lt/min: 735 lt	34	10 lt/min: 345 lt 25 lt/min: 258 lt
2000	72,2	12,3	74	10 lt/min: 1657 lt 25 lt/min: 1142 lt	44	10 lt/min: 463 lt 25 lt/min: 340 lt

Eco Combi 2 – (Lower) Fixed heat exchanger powers chart

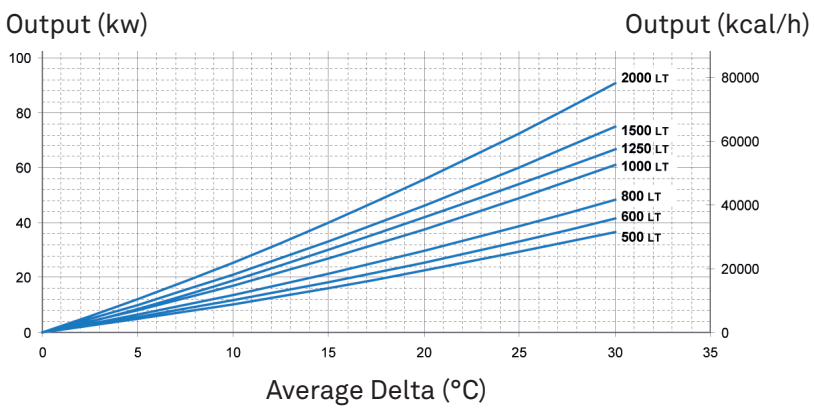

Thermal output is given in both kW or kcal/h in terms of average temperature difference between primary and secondary circuit, all for a range of primary 3 m³/h.
For example, a 1000 liters ECO COMBI 2 with a water flow of 3 m³/h at 80 °C inlet and outlet at 70 °C, has on the storage of water an average temperature of 60 °C, the mean difference of temperature will be: (80 + 70) / 2-60 = 15 °C and therefore you can exchange up to approximately 28 kW.

Output of the ECO COMBI 2 lower heat exchangers depending on the average DeltaT between primary and accumulation considering flow rate 3 m³/h.

Accessories

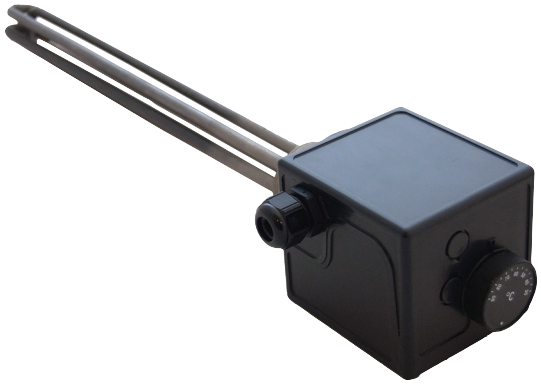

Immersion heater 6 kW or 9 kW

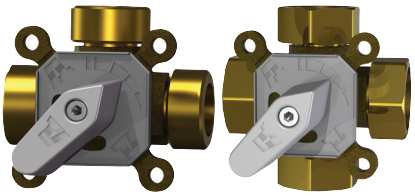

Mixing valves

Thermometer incl. submersible tube

Radiator / circulation pumps

Charging units and regulators, see main catalogue

Termoventiler AB
Nolhagavägen 12
SE-523 93 Marbäck
Sweden

Tel. +46 (0) 321 261 80
info@termoventiler.se

TV Termoventiler GmbH
Chemnitzer Straße 71
DE-09212 Limbach-Oberfrohna
Germany

Tel. +49 (0) 3722 50 57 00
info@termoventiler.de

190424

termoventiler.eu